Simple. Standalone. **Smart.**

CONNECT AND CONTROL.

The standalone smart lock; innovatively designed and manufactured by Codelocks to combine smart technology with traditional access control features.

MULTIPLE ACCESS OPTIONS

Codelocks Smart Locks provide flexibility and convenience by offering a range of access methods, allowing you to choose the most suitable for your application. Allow clients access via a simple code input, allocate and register a MIFARE® compatible card or send an invitation to their phone.

NETCODE TECHNOLOGY

Generate and send time-sensitive codes to end users using the K3 Connect App* or Codelocks Connect Portal. Set codes for a specific start date and time, that will automatically expire after your set duration. Additional features include blocking NetCodes to control and restrict access.

EASY OPERATION

Operate and manage locks directly via the keypad or via any Bluetooth compatible smartphone by downloading the K3 Connect App*. Program locks via your smartphone, generate and send codes for easy access, issue smart cards for alternative entry. Keep track on who, when and which locks were accessed by downloading and viewing the lock audit trail data. The lock does not require Wi-Fi connection for operation. This significantly increases its potential for use in areas where Wi-Fi is unavailable or intermittent, adding to the benefits of this innovative product line.

CONTROLLED CODE FREE

Allow free access at set times of day by setting the lock into Code Free mode. Removes the hassle of unlocking doors for free access periods. Reduce the administration burden of manually putting locks into Code Free mode. Create up to 10 different Code Free periods that automatically enable only when scheduled. Code Free is used in many different situations - office hours only, cleaning staff, school environment (set Code Free periods for break times).

*The App is available on the Apple App Store for Apple devices or Google Play™ for Android™ devices. Apple, the Apple logo and iPhone are trademarks of Apple Inc., registered in the U.S. and other countries. App store is a service mark of Apple Inc. Android, Google Play and the Google Play logo are trademarks of Google Inc.

Managing and operating locks has never been easier.

Smart Locks offer advanced programming and access methods, as well as simple retrofit opportunities for easy upgrades.

SMART LOCK FEATURES

- Manage and operate locks via smartphone
- Keyless entry - no lost keys
- Two year guarantee*
- 12 button back-lit keypad
- NetCode generation technology
- Set up to 10 Code Free access periods
- Suspend and restore any or all clients
- Mortice Latch, Mortice Lock and Panic Kit available
- Keypad indicates locked / unlocked status
- Tamper time out and low battery warning
- Personal wireless connectivity for management
- Simple upgrade from electronic range using same fixings
- Auxiliary connections enabling four modes of operation

Scan to shop!

CL4500

CL5500

CODE.
100 Client User Codes

CARD.
150 Client Smart Cards

PHONE.
100 Phone Clients

Tech Spec

LOCK MODELS

Mortice Latch

CL4510 + CL5510

Medium duty tubular mortice latch retracts via the outside knob after a valid code input. When the door closes, the spring latch will lock the door.

Mortice Lock

CL4520 + CL5520

Euro profile mortice sash lock with deadbolt and latchbolt. With the deadbolt thrown it denies access to code users. Supplied with Euro profile cylinders and three keys.

Panic Access Kit

CL5510 Only

Front plate only. Install with new or existing panic equipment. The follower on the panic equipment must return to square to align with follower on the lock.

Two Mortice Latch Sizes Available:

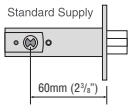

Requires 25mm x 82mm (1" x 3¹/₄") hole

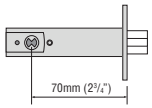

Requires 25mm x 92mm (1" x 3⅝") hole

AUXILIARY CONNECTIONS

Remote Release

REM1 is intended for push-button release where the lock will open for the normal set time. REM2 is intended for use where the lock needs to be released for a longer period. When a switch or relay connected to REM2 is closed, the lock will open for a period of 30 minutes after which the lock will revert to normal operation.

Sensor Mode

Allows two dry contact switches or sensors (door status and latch monitoring) to be connected. Trigger entry will be added to the audit trail.

Sensor + Alert

A hybrid mode combining the support for a single dry contact switch or sensor (as per Sensor Mode) and an output. The output can be connected to any compatible device, such as CCTV, with an input that supports the detection of a falling (changing) voltage.

Unlock + Lock Down

Support the connection of two dry contact switches. Connected to REM1, the switch will unlock the lock for the period set by the standard re-lock delay. Connected to REM2, the switch would trigger the Lock Down Mode of the lock, disabling all codes aside from the Master and Sub-Master codes.

STANDARDS

Codelocks Smart Fire Kits can be fitted to latch locks for 30 or 60 minute fire doors. Tested in accordance with: BS EN 1634-1:2008

TECHNICAL SPECIFICATIONS

FEATURE	DESCRIPTION
Spindle Type	8mm (⁵/₁₆") spring loaded spindle
Batteries	Monitor status via App - 4 x AA batteries
Mortice Latch	Medium duty latch with 'anti-shim' plunger
Low Battery Warning	Red LED will flash on opening to indicate low battery
Buttons	12 button back-lit keypad
Material	Zinc Alloy
Finish Colour	Brushed Steel
Non Handed	Locks will fit doors hung on the left or right
Door Thickness	35mm - 60mm (1³/₈" - 2³/₈")
Key Override	As standard and front cylinder change
Keyed Alike	Locks can be supplied keyed alike on request
Memory	Stores 350 different Clients
NetCode	Available via the App or online Portal
Fitting Options	Vertical only
Suitable For	Internal and external use

PRODUCT DIMENSIONS

CL4510

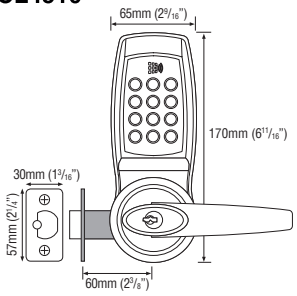

CL4520

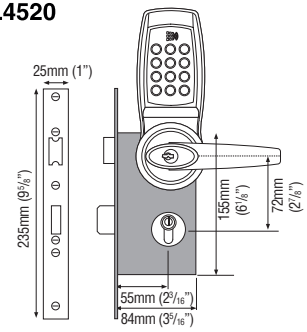

CL5510

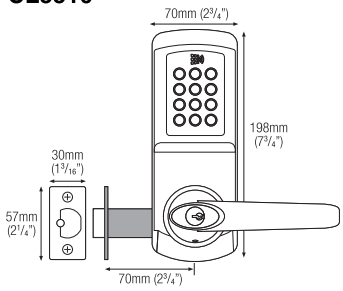

CL5520

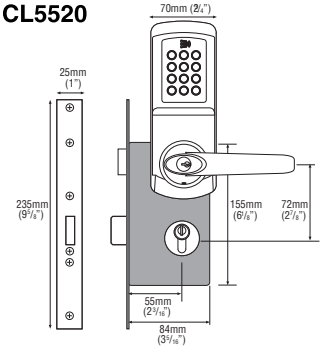

© 2019 Codelocks Ltd.
All rights reserved.

CODELOCKS

*Codelocks electronic locks offer a two year guarantee and will be repaired, service or replaced free of charge if they develop a manufacturing fault. Faults caused by misuse, abuse and/or poor fitting are not covered by guarantees.